MarsLW

High Performance IR Detectors for Long Wave Infrared Imaging 320x256 HgCdTe LWIR (30µm pitch)

- 320Hz Operation
- Low Power
- High Sensitivity
- Lightweight
- 30 micron Pixel Technology

Sofradir's Mars Long Wave Infrared (LWIR) Integrated Detector Dewar Cooler Assembly (IDDCA) focal plane array features a staring, snapshot 320x256 Mercury Cadmium Telluride (HgCdTe or MCT) focal plane array in a compact dewar for long-wave (8-10µm) infrared imaging. The Mars LW is ideal for use in military and commercial systems having an 8-10µm detection requirement. These detectors take advantage of Sofradir's process to optimize performance of photovoltaic HgCdTe technology, delivering stable, low defect density staring arrays with material bandgap adapted for LW applications.

The Sofradir IRFPAs are hybridized on a state-of-the-art CMOS Read-Out Integrated Circuit (ROIC), and mounted in a long vacuum-life dewar and cooler configurations that meet various different mechanical and cooling requirements of the systems for which they are intended.

The Mars LW IDDCA is available with separate proxy electronics (including A/D, drive and cooler control electronics), as a cooled infrared engine and as a calibrated, cooled infrared scientific camera.

STANDARD CONFIGURATION:

- 9.5µm IRFPA at 77K into compact Integrated Detector Dewar Cooler Assembly (IDDCA) with miniature 0.4W Stirling-cycle rotary cooler

ON-REQUEST CONFIGURATIONS:

- 9.5µm IRFPA at 77K into 0.7W split Stirling-cycle linear cooler IDDCA, for expanded lifetime and system integration facilitation
- 9.5µm IRFPA at 80K (N_2 gas) into Joule-Thomson cooled Detector Dewar Assembly (DDA)
- Custom dewar, cold filter, and cooler configurations

Surveillance Systems

Security

Soldier Systems

ROIC FEATURES

Selection	Parallel or serial electrical interface
Modes	Snapshot operation, direct injection input circuit, integrate-then-read mode, programmable integration time (≥ 3µs), anti-blooming
Window Modes	Fixed (320x256, 320x240, 256x256) or programmable (any size down to 64x1 anywhere in the 320x256 array)
Charge Handling Capacity	$12x10^6$ or $37x10^6$ e^- (for 100% well fill)
Electrical Dynamic Range	> 80dB
Readout Noise	1000 e^- (for highest gain)
Signal Outputs	1 or 4
Pixel Output Rate	up to 6.6MHz per output
Frame Rate	up to 320Hz full frame rate (320x256, 4 outputs)
Electrical Interface	14 inputs/outputs (default mode: 4 outputs, gain 1, 320x256) + 2 pins for regulation

ARRAY FEATURES

Pixel Pitch	30µm x 30µm
Detector Spectral Response	7.7µm - 9.5µm
FPA Operating Temperature	77 K

SOFRADIR-EC

MarsLW

High Performance IR Detectors for Long Wave Infrared Imaging
320x256 HgCdTe LWIR (30µm pitch)

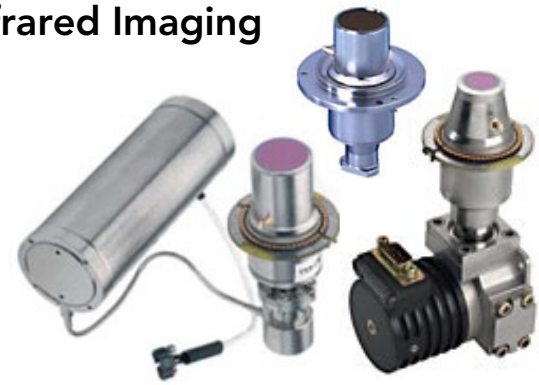

TYPICAL PERFORMANCE

Non Uniformity	< 5% RMS (σ/mean, 300K uncorrected performance)
Array Operability	> 99% typical (NETD < 2xNETD average)
Pixel NETD (average)	≤ 20mK (9.6µm, 37x10⁶ e⁻, 300K, 50% well fill, 200Hz)
Residual Fixed Pattern Noise	low and stable
MTF	maximized

OPTIONS

LW Engine	Proximity Driving Electronics (including ADC)
Complete LW Camera	

ORDERING INFORMATION

Mars LW K508	914960
Mars LW Split Cooler	914976
Mars LW JT Cooler	Call

STANDARD CONFIGURATION

Mars LW K508 — **K508 Micro Cooler**

- Integrated cooler driving electronics
- FOV: F2 Weight: < 0.6 kg 1.32 lb)
- IRFPA temperature: 77 K
- Operating Temperature: -40°C / +71°C
- Power Supply: 24 V
- Typical Characteristics at 20°C, 70 K
  - Cooldown input Power: 11 W_{DC} (*) Cooldown time: 7 min., 30 sec.
  - Regulated input power: 6.5 W_{DC}

(*) W_{DC} – at cooler C&CE DC input

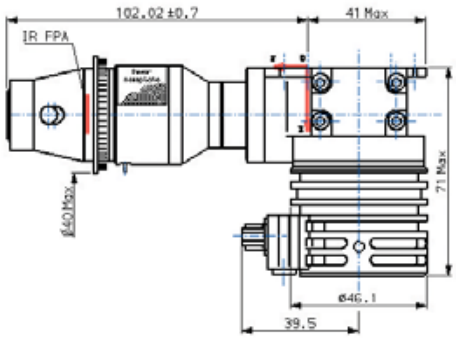

CONFIGURATIONS ON REQUEST

Mars LW LS5-7i — **0.7W LS5-7i Split Cooler**

- Weight: < 1.50 kg (3.3 lb)
- Operating Temperature: -40°C / +71°C
- Power Supply: 11 V
- Typical Characteristics at 20°C, 70K
  - Cooldown input Power: 30 W_{AC} (*)
  - Regulated input power: 16 W_{AC}
  - Cooldown time: 5 min.

(*) W_{DC} – at cooler C&CE DC input

Mars LW JT — **11 mm Joule-Thomson Cooler**

- FOV: f/2
- Weight: < 1.50 kg (3.3 lb)
- Operating Temperature: -40°C / +71°C
- 300 bar nitrogen gas (80K) at 20°C

Technical characteristics described in this data sheet are for information only and are not contractual. Because of ongoing product enhancements, specifications are subject to change without notice. Export of these products from the United States is controlled by the US Government. Prior authorization is required for re-export or transfer.

SOFRADIR-EC

SOFRADIR EC, INC.
373 US Hwy 46W, Fairfield, NJ 07004 USA
Phone: 973-882-0211 Fax: 973-882-0997

Groupe SOFRADIR

© 2011 Sofradir EC, Inc. - All rights reserved. An ISO 9001 Certified Company.

Edition: 09-11 rev11