Scorpio BB

High Performance IR Detector for Broadband Infrared Imaging 640x512 HgCdTe BB (15µm pitch)

- High Resolution Format
- High Sensitivity
- 15µm Pixel Technology
- Compact Design

Security

Defense

Soldier Systems

Sofradir has been a world leader in infrared detection technology for 23 years. The Scorpio BB Integrated Detector Dewar Cooler Assembly (IDDCA) features a staring snapshot 640x512 Broadband (BB) focal plane array in a compact housing for broadband (1.5-5.1µm) infrared imaging. This detector is ideal for use in such high performance MWIR imaging products as FLIR, IRST, reconnaissance, surveillance and airborne cameras. Hybridized on a state-of-the-art CMOS Read-Out Integrated Circuit (ROIC), this detector is also available in various long vacuum-life dewar and cooler configurations in order to meet the different mechanical and cooling needs of the intended systems.

AVAILABLE CONFIGURATIONS:

- Integrated Detector Dewar Cooler Assembly (IDDCA) with miniature Stirling-cycle rotary cooler, for compact, low power configuration

ON-REQUEST CONFIGURATIONS:

- IDDCA with split Stirling-cycle linear cooler, for expanded lifetime and system integration facilitation
- Detector Dewar Assembly (DDA) without or with Joule-Thompson cooler (pressurized gas cooling)

ROIC FEATURES

Selection	Parallel or serial electrical interface
Modes	Snapshot operation, direct injection input circuit, selectable read mode (IWR or ITR), programmable integration time, anti-blooming
Window Modes	Fixed (640x512, 640x480, 512x512) or random (any size down to 132x1), image rotation mode
Charge Handling Capacity	> 6.5×10^6 e^- (for 100% well fill and ITR mode) or > 5×10^6 e^- (for 100% well fill and IWR mode)
Electrical Dynamic Range	> 80dB
Readout Noise	> 420 e^-
Signal Outputs	4 (analog)
Pixel Output Rate	up to 10MHz per output
Frame Rate	up to 120Hz full frame rate (640x512)

ARRAY FEATURES

Pixel Pitch	15µm x 15µm
Detector Spectral Response	1.5µm - 5.1µm
FPA Operating Temperature	up to 90K typical (stirling cycle coolers)

TYPICAL PERFORMANCE

Pixel NETD (average)	≤ 16mK typical (293K, 50% well fill, 100Hz)
Residual Fixed Pattern Noise	low and stable (< NETD)
Non-uniformity	< 5% RMS (σ/mean, 293K uncorrected performance)
Array Operability	> 99.5% typical (NETD < $2 \times NETD_{average}$)
MTF	maximized

OPTIONS

- Complete BB Camera
- Broadband Engine
- Proximity Driving Electronics (including ADC)

SOFRADIR-EC

Scorpio BB

STANDARD CONFIGURATIONS

Scorpio BB RM2 — **RM2 Microcooler**

FOV: f/2

Weight: < 0.45kg (0.99 lb)

Operating Temperature: -40°C / +71°C

Power Supply: 32 V

Typical Characteristics at 20°C, 90K
- Cooldown input power: 10.0 W_{AC} (*)
- Regulated input power: 4.2 W_{AC}
- Cooldown time: 4 min.

(*) W_{AC} - at cooler pins AC input

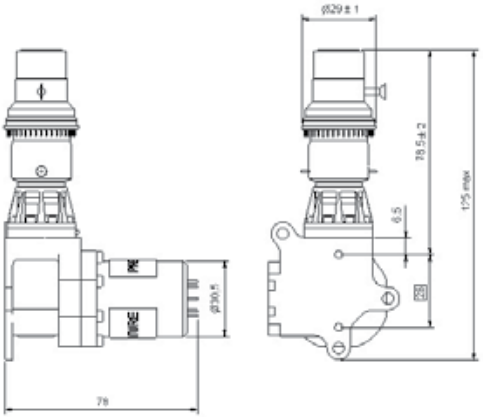

Scorpio BB K508 — **K508 Microcooler**

FOV: f/2

Weight: < 0.65kg (1.43 lb)

Operating Temperature: -40°C / +71°C

Power Supply: 24 V

Typical Characteristics at 20°C, 90K
- Cooldown input power: < 13W_{DC} (*) Regulated input power:
- Cooldown time: < 6 min.

(*) W_{DC} = at cooler C&C input

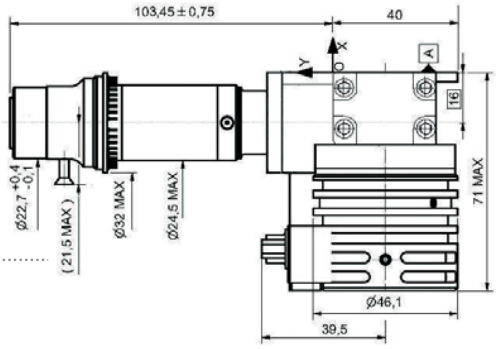

CONFIGURATIONS ON REQUEST

Scorpio BB-LS — **LS Split Cooler**

FOV: f/1.8

Weight: < 2.6kg (5.7 lb)

Operating Temperatures: -40°C / +71°C

Typical Characteristics at 20°C, 90K
- Cooldown input power: TBD W_{AC} (*)
- Regulated input power: TBD W_{AC}
- Cooldown time: TBD min.

(*) W_{AC} - at cooler C&CE DC input

Scorpio BB-JT — **11mm Joule-Thomson Cooler**

FOV: f/2

Weight: < 0.15kg (0.33 lb)

Operating Temperature: -40°C / +71°C

Argon gas

Typical Characteristics at 20°C, 90K (300bar argon gas)
- Cooldown input power: TBD Regulated input power: TBD NI/min.
- Cooldown time: TBD NI/min.

Technical characteristics described in this data sheet are for information only and are not contractual. Because of ongoing product enhancements, specifications are subject to change without notice. Export of these products from the United States is controlled by the US Government. Prior authorization is required for re-export or transfer.

SOFRADIR-EC

SOFRADIR EC, INC.
373 US Hwy 46W, Fairfield, NJ 07004 USA
Phone: 973-882-0211 Fax: 973-882-0997

Groupe SOFRADIR

Edition: 09-11 rev04

© 2011 Sofradir EC, Inc. - All rights reserved. An ISO 9001 Certified Company.